I-M-S-XXPIN-T Series

■ PART NO: I-M-S-XX-T

- Material:
  Housing: High Temperature Housing Withstands IR and VPR Soldering Methods.
  Contacts: Brass
- Pitch: 2.5mm

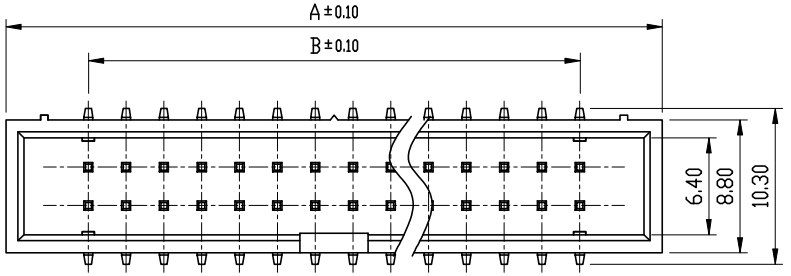

SPECIFICATIONS

- Current Rating: 1.5AMP
- Insulator Resistance: 5,000 mΩ min. at DC 500V
- Contact Resistance: 20mΩ max. at DC 100mA
- Operating Temperature: -60º C~+125º C
- Max Processing Tempeature: 230º C For 30~60 Seconds.

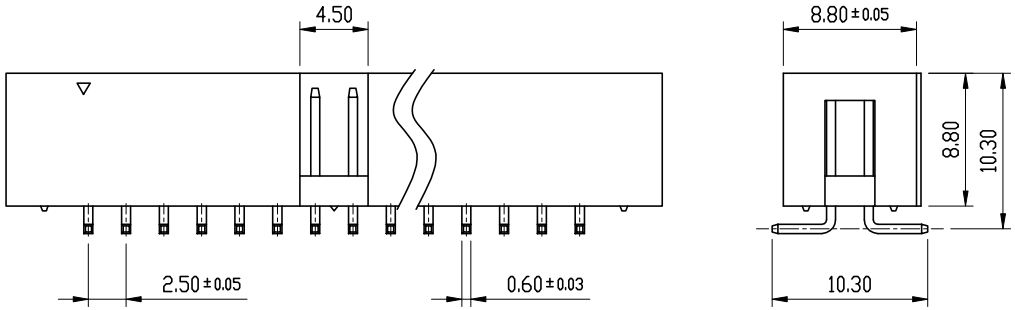

CIRCUITS	PART NO.	DIMENSION			CIRCUITS	PART NO.	DIMENSION		
		A	B	C			A	B	C
6	I-M-S-06-T	15.06	5.08	3.0	26	I-M-S-26-T	40.50	30.48	3.0
8	I-M-S-08-T	17.90	7.62	3.0	30	I-M-S-30-T	46.00	35.56	3.0
10	I-M-S-10-T	20.14	10.16	3.0	34	I-M-S-34-T	50.70	40.64	3.0
12	I-M-S-12-T	22.67	12.70	3.0	40	I-M-S-40-T	58.30	48.26	3.0
14	I-M-S-14-T	25.22	15.24	3.0	44	I-M-S-44-T	63.78	53.34	3.0
16	I-M-S-16-T	27.80	17.78	3.0	50	I-M-S-50-T	71.05	60.96	3.0
20	I-M-S-20-T	32.68	22.86	3.0	60	I-M-S-60-T	84.10	73.66	3.0
24	I-M-S-24-T	38.32	27.94	3.0	64	I-M-S-64-T	89.25	78.74	3.0

HO TIEN PRECISION INDUSTRY CO., LTD.
合 田 精 密 工 業 股 份 有 限 公 司

RECORD OF REVISION／修定內容	REV.BY／修定者	REV. DATE／修定日期	PART NO.／型號	I-M-S-XX-T		APPROVED BY／核准	
			METERIAL／材質			CHECKED BY／審查	
			TREATMENT／表面處理			DRAWN／製圖	
			CUSTOMER／客戶名稱			DATE／製圖日期	
			UNIT／單位 mm	SCALE／比例	1/5	DRAWING TYPE／圖面種類	